

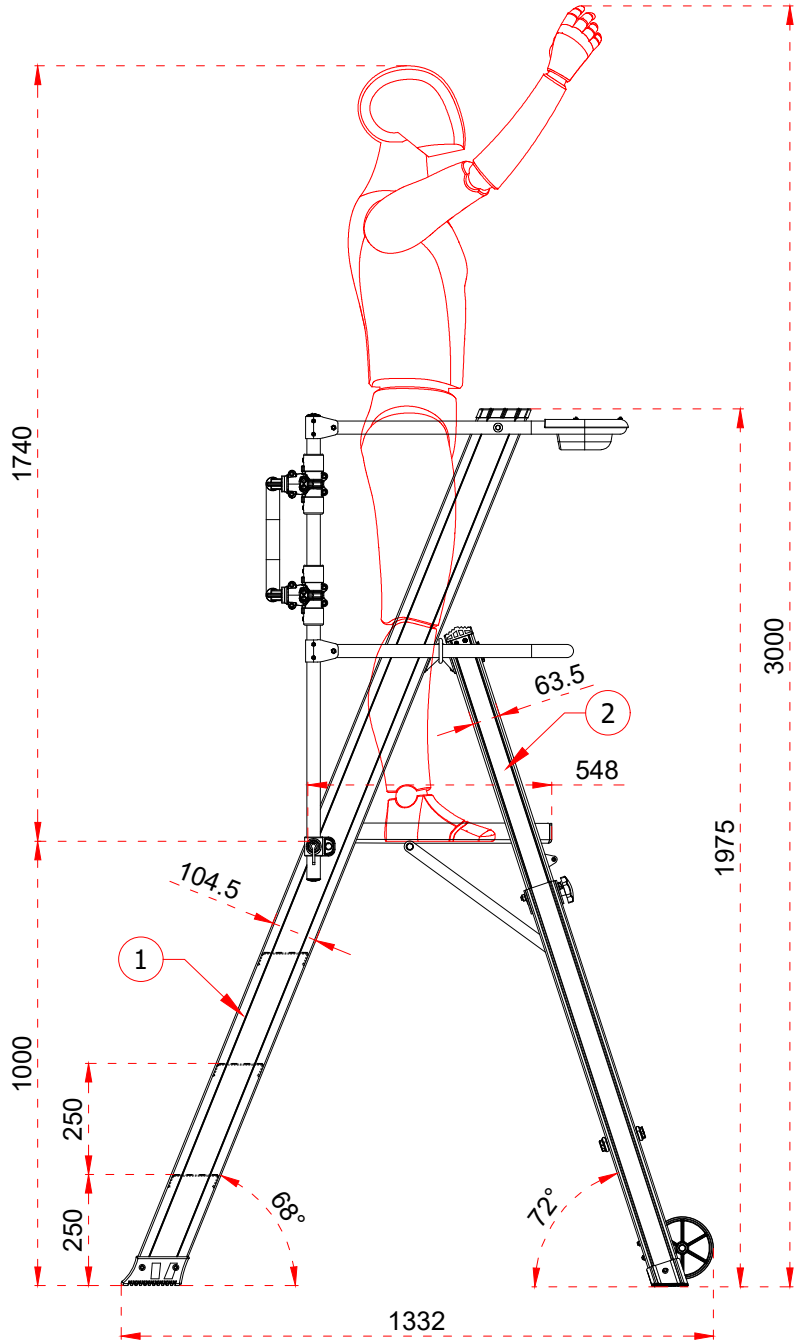

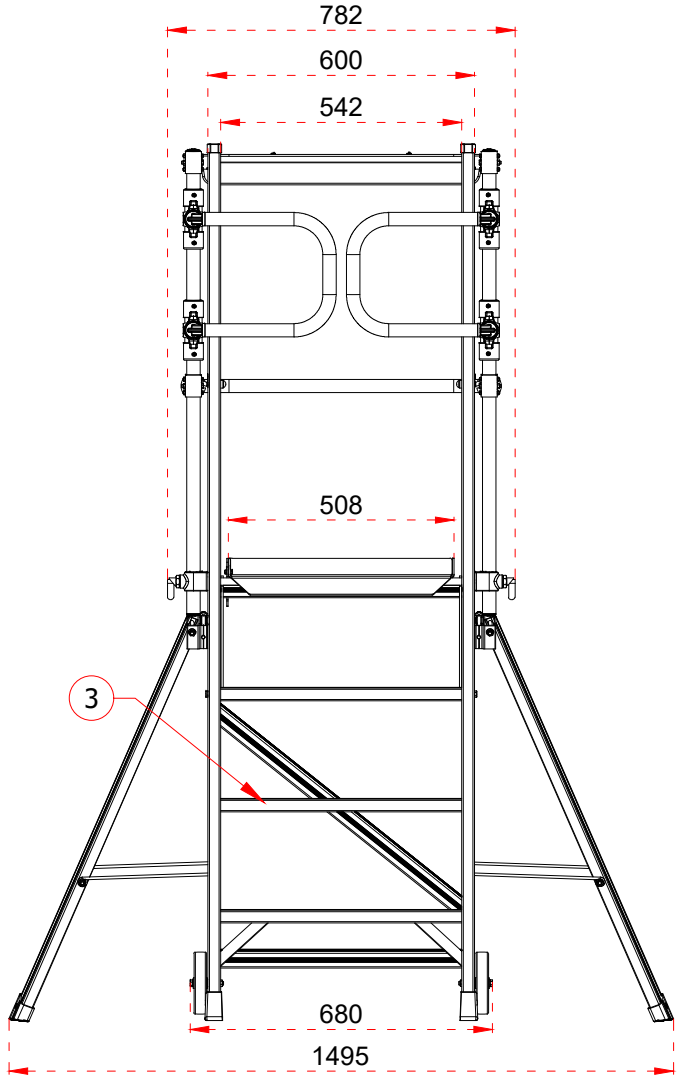

Certificate
EN 131-7
Norm

max. 150 kg